robot coupe®

R 7 V.V.

AS OPTION 3 BLADES

7.5 L

D	
Number of meals per service	20-100 covers
Amount processed per	500 gr - 3,8 kg

A SALES FEATURES

The R 7 V.V. table-top cutter is ideal for grinding, mincing and kneading, as well as for making mousses, emulsions and smooth stuffings. It effortlessly performs even the lengthiest task in just a few minutes, consistently producing a flawless end product.

B TECHNICAL FEATURES

R 7 V.V. table-top cutter. 230V/50-60/1. Power: 1500 W. Variable speed: 300-3500 rpm. R-Mix function: -60 to -500 rpm. Timer. 7.5-l stainless-steel bowl with handle, plus bowl-base, smooth-edged, twin-blade assembly. 20-100 covers.

Select your options at the back page F part.

C TECHNICAL DATA

Output power	1500 W
Electrical data	230V/50-60/1 5.8 A – plug supplied
Variable speed	From 300 to 3500 rpm
R-Mix function	-60 to -500 rpm
Dimensions (WxDxH)	280 x 365 x 540 mm
Rate of recyclability	95%
Net weight	23 kg
Reference	24711

STANDARDS
EN 12100-1 & 2 - 2004, EN 60204-1 - 2006, EN 12852, EN 60529-2000 : IP 55 and IP 34

ETL LISTED 9900098 Conforms to UL NSF/ANSI Std 763 Std 8 Certified to CAN/CSA Std C22.2 No.195

E PRODUCT FEATURES / BENEFITS

MOTOR UNIT

- **Industrial direct-drive (no belt) induction motor** designed for intensive use
- Power 1500 W
- Stainless-steel motor shaft
- All-metal motor unit
- Magnetic safety system, thermal failsafe and motor brake
- On/Off buttons flush with unit
- Flat motor base for easier assembly and cleaning
- **Variable speed 300 3500 rpm**
- **R-Mix function** (-60 to -500 rpm variable-speed reverse rotation) for mixing without cutting
- **Pulse function** for greater cutting precision
- **Timer**

CUTTER FUNCTION

- 7.5-l stainless-steel cutter bowl with handle for better grip
- 100% stainless-steel, bowl-base blade assembly with two high-strength, smooth-edged blades for homogeneous processing even for small amounts
- Central lid opening for adding liquid or solid ingredients during processing
- High heat- and shock-resistant see-through lid to monitor processing from start to finish
- All parts are dishwasher-safe and can easily be removed for cleaning

STANDARD ATTACHMENTS

- 7.5-l bowl with lid
- 100% stainless-steel, smooth-edged, twin-blade assembly

R 7 V.V.

F OPTIONAL ATTACHMENTS

- Coarse-serrated, twin-blade assembly for grinding and kneading - Ref. 27308
- Fine-serrated, twin-blade assembly for chopping herbs and grinding spices - Ref. 27307
- Additional smooth-edged, twin-blade assembly - Ref. 27306
- Bowl scraper arm - Ref. 49552

Coarse-serrated

Fine-serrated

Bowl scraper arm

G DRAWINGS AND DIMENSIONS
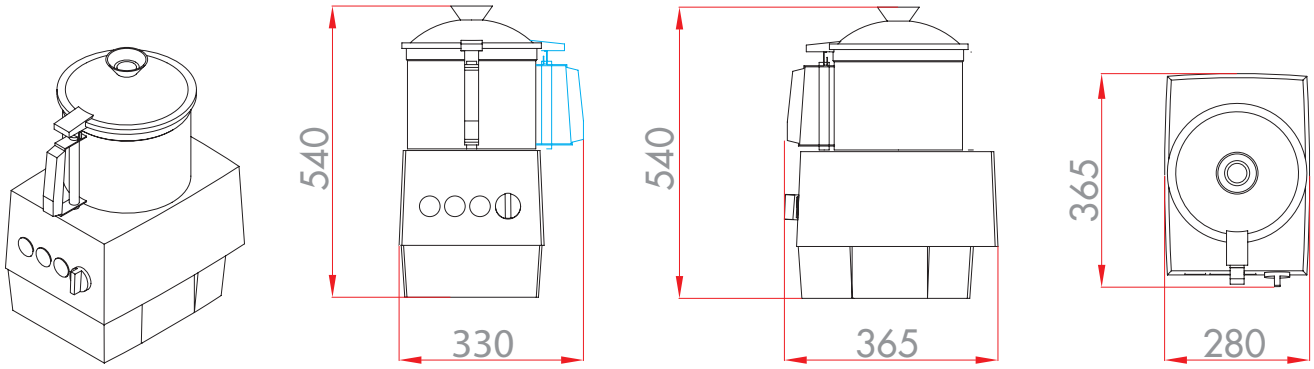
230V/50-60/1 - power cord and plug supplied