MP60

Model
MP60

Product Description
Planetary Mixer, 60 litre, Heavy Duty

Product Code
5MP60-3PH

Standard Features

- Heavy duty 60ltr, floor standing, gear driven, planetary mixer
- Particularly suitable for bakeries, hotels, restaurants, canteens etc
- Easy to operate
- Planetary mixing action ensures perfect results
- High torque motor allows mixing of stiffer doughs and larger batches
- 4 fixed speeds: 84, 148, 248 and 436 rpm
- Easy speed-shifting
- Timer
- Emergency stop button
- Interlocking bowl guard and bowl lift
- Dual bowl clamps to lock bowl down
- Stainless steel safety guard with ingredient chute and automatic shut-off when guard is opened at any speed
- Resettable thermal overload protection (NVR device)
- Long lasting lubricant providing abrasion resistant transmission
- Transmission gears are made of heat treated, hardened steel
- Heavy duty, cast iron frame
- Non-slip rubber feet
- Quiet operation
- Heavy duty gearbox
- Industry standard #12 attachment hub

Standard Accessories / Attachments

1 x Whisk
1 x Beater
1 x Dough hook
1 x 60 litre Stainless steel bowl
1 x Bowl trolley

Warranty

Covered by Metcalfe 3-year warranty (1st year parts and labour, 2nd & 3rd years parts only) and full after sales service.
Note: The minimum requirement for all electrical equipment's correct operation is an air temperature of between +5°C and +40°C. Mixers should not be operated in a cold store.

Optional Attachments

Item	Product Code
Veg Prep Attachment (no plates included)	MPVS12A

Item	Product Code
Meat Mincer Attachment (6mm & 8mm plates included)	MPG12SH

MP60

Optional Accessories

Item	Product Code
Bowl	MP11091-12-008
Beater	MP11091-12-001
Dough Hook	MP11091-12-003
Whisk	MP11091-12-002
Bowl Trolley	MP11091-12-011

Item	Product Code
30ltr reduction bowl	MP11091-12-007
30ltr reduction beater	MP11091-12-004
30ltr reduction dough hook	MP11091-12-006
30ltr reduction whisk	MP11091-12-005

Drawing

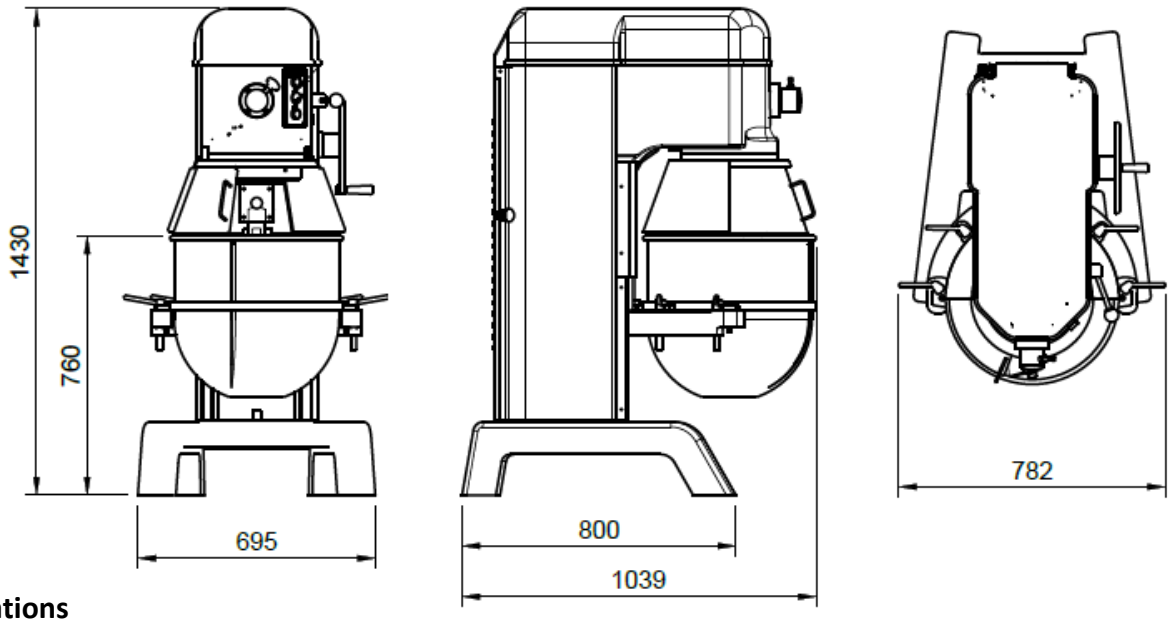

Specifications

Model	Capacity (ltr)	Phase (Ø)	Motor (Volt)	Freq. (Hz)	AMP (A)	Power (kW / hp)	Speed (rpm)
MP60 – 3ph	60	3	380-415	50	5.3 total	2.25 / 3	84 / 148 / 248 / 436

Dimensions | Shipping Information

Model	Overall Dimensions D x W x H (mm)	Net Weight (kg)	Packed Dimensions D x W x H (mm)	Packed Weight (kg)	Volume (m3)
MP60	1039 x 782 x 1430	455	1150 x 790 x 1680	480	1.526

We reserve the right to alter the specification and technical details for this item at any time without prior notice. 3/2024

Metcalfe Catering Equipment Ltd
Haygarth Park
Blaenau Ffestiniog
Gwynedd, LL41 3PF

t 01766 830 456 e sales@metcalfecatering.com w www.metcalfecatering.com